225372

*NOTE: THESE DIMENSIONS ARE BASED ON THE FLANGE TYPE SHOWN ABOVE, AND MAY CHANGE WHEN OTHER FLANGE TYPES ARE SELECTED.

REVISIONS				
ZONE	LTR	DESCRIPTION	DATE	APPROVED
	D	N/M FORMAT UPDATE		

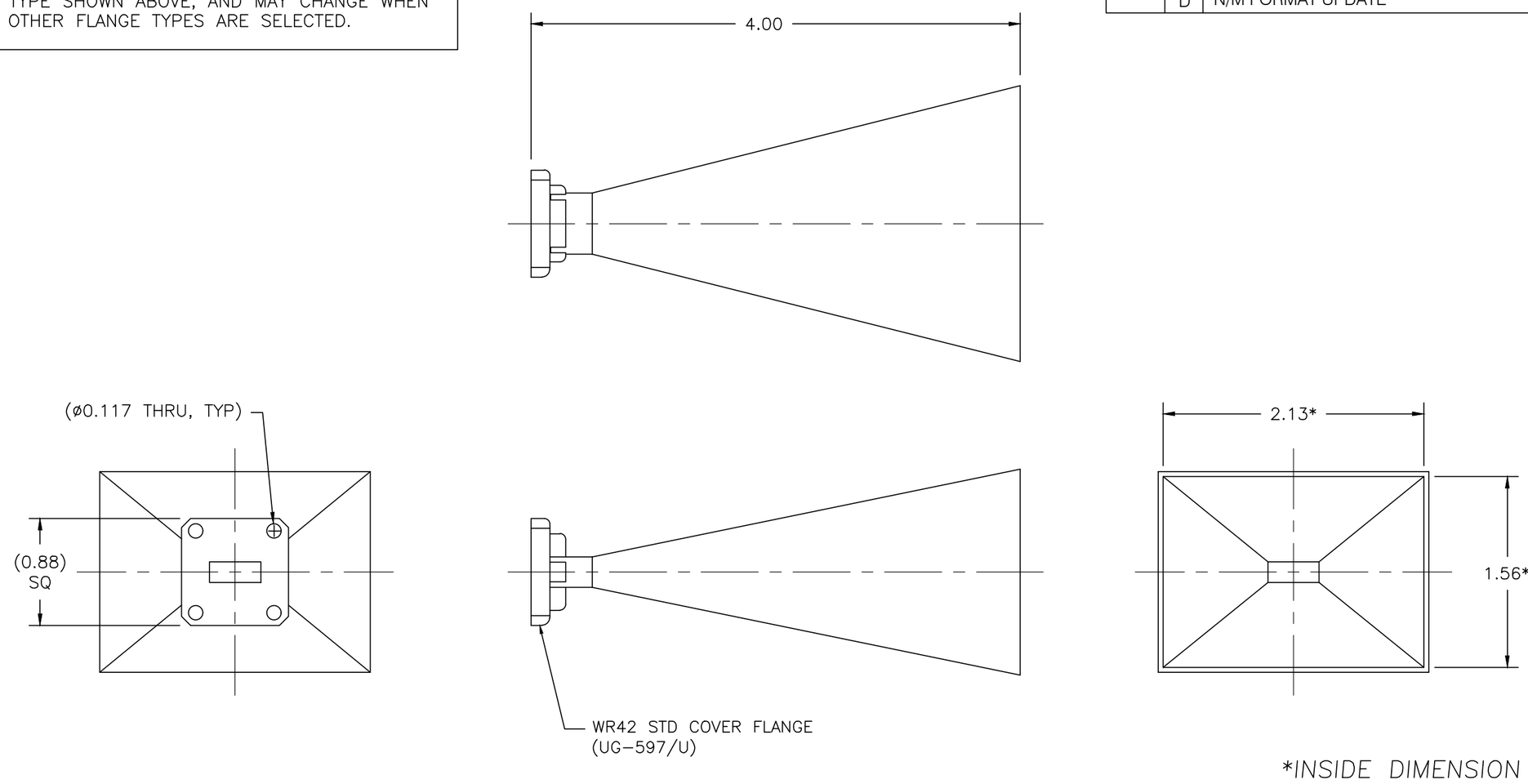

PRINT NOT ON AUTOMATIC DISTRIBUTION VERIFY REVISION PRIOR TO USE

Narda-MITEQ PROPRIETARY

THIS DOCUMENT CONTAINS INFORMATION WHICH IS PROPRIETARY TO Narda-MITEQ. THE CONTENTS SHALL NOT BE DISCLOSED, COPIED, DISTRIBUTED, OR USED UNLESS AUTHORIZED BY AN OFFICER OF Narda-MITEQ.

THESE ITEM(S)/TECHNOLOGY CONTAIN INFORMATION SUBJECT TO U.S. GOVERNMENT EXPORT CONTROL IN ACCORDANCE WITH THE EXPORT ADMINISTRATION REGULATIONS (EAR), 15 CFR PARTS 730-744. EXPORT OF THIS DATA TO ANY FOREIGN COUNTRY OR DISCLOSURE OF THIS DATA TO ANY NON-US PERSON MAY BE A VIOLATION OF FEDERAL LAW.

NEXT ASSY	USED ON
	42-442-6

APPLICATION

UNLESS OTHERWISE SPECIFIED DIMENSIONS ARE IN INCHES
TOLERANCES ON
DECIMALS .XX±.03 .XXX±.005
ANGLES ±0°30'

PROJECTION

MATERIAL ALUM ALY

FINISH CHEM FILM

13960

	NAME	DATE
DRN BY	DM	06/08/20
DRAFT DESIGN		
APPROVED BY		
PROJ ENGR		
MFG ENG		
Q.A.		

AUTOCAD FILE FORMAT

narda MITEQ
435 MORELAND RD HAUPPAUGE, NY 11788

OUTLINE WR42 HORN 20dB GAIN

SIZE	CODE IDENT. NO.		REV.
B	94S46	225372	D

SCALE | REF 42-442-6 | SHEET 1 OF 1

FormB 10/2013

AUTOCAD 3-2022