REV	AUTH	DATE	
A	DM	04/16/13	INITIAL RELEASE
B	LM	7/10/14	CHANGE TOLERANCE OF 2 PLACE DECIMAL FROM +/- .01 TO +/- .04
C	DM	05/02/17	UPDATED LOGO ; NO DIMENSION CHANGES

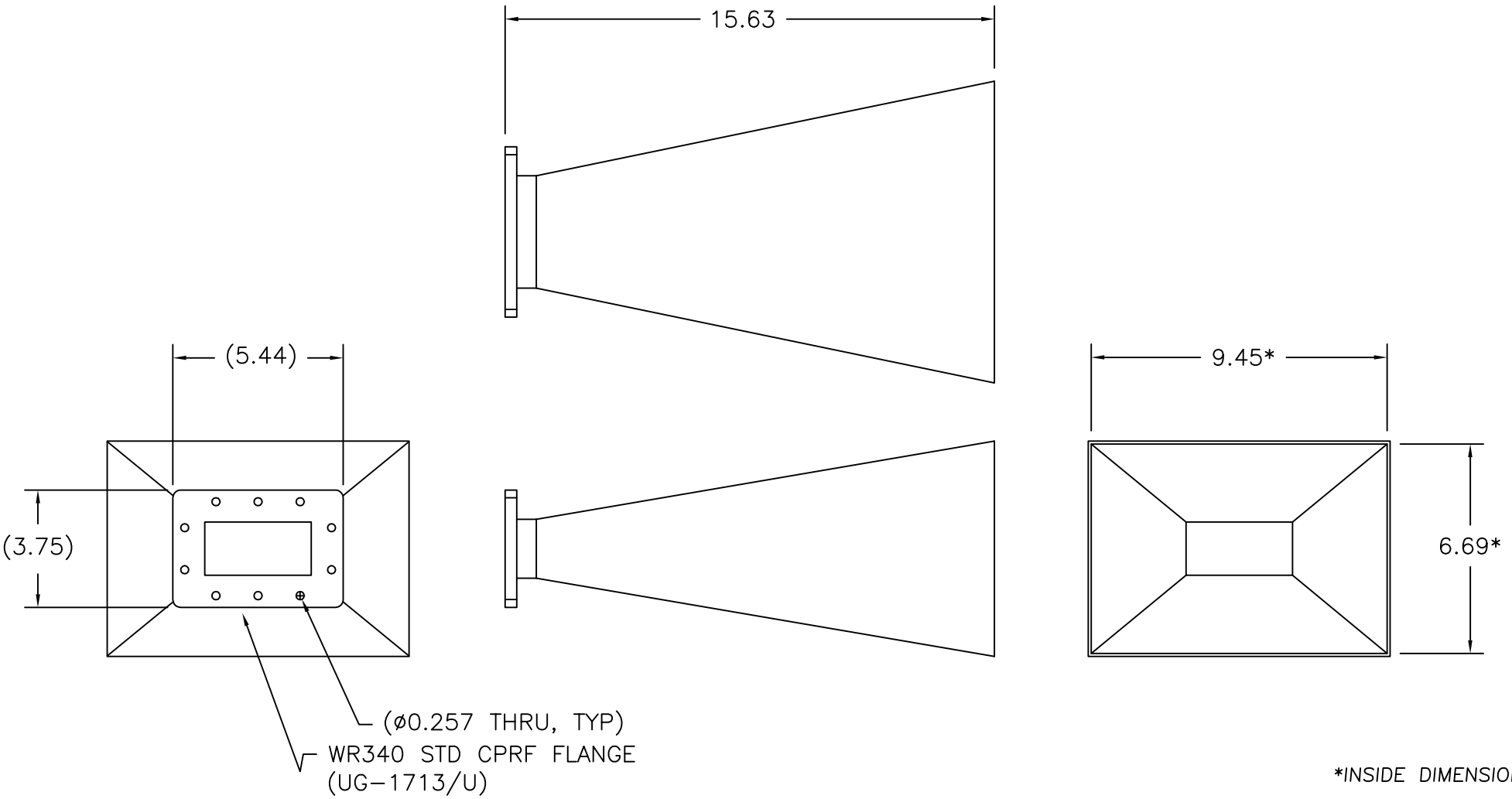

*INSIDE DIMENSION

*NOTE: THESE DIMENSIONS ARE BASED ON THE FLANGE TYPE SHOWN ABOVE, AND MAY CHANGE WHEN OTHER FLANGE TYPES ARE SELECTED.

THIRD ANGLE PROJECTION:

UNLESS OTHERWISE NOTED, DIMENSIONS ARE IN INCHES, TOLERANCES ARE:

FRACTIONS: ±1/64 ANGLES: ±1/2°

MACHINED FINISH 63 √ OR BETTER

DECIMALS 2 PLACE	3 PLACE
±.04	±.005

APPROVALS		DATE
DRAWN	D.M.	05/02/17
CHKD.		
APRVD.		
MATERIAL	ALUMINUM	
TREATMENT	–	
FINISH	CHEM FILM	

L-3 Narda - ATM
TEL: (631) 289-0363 FAX: (631) 289-0358
www.atmmicrowave.com

THE INFORMATION IN THIS DRAWING IS PROPRIETARY AND SHALL NOT BE USED OR DISCLOSED WITHOUT THE PRIOR WRITTEN CONSENT OF ATM, INC.

DO NOT SCALE DWG.

OUTLINE

WR340 HORN, 15dB GAIN

SIZE	CAGE CODE	ATM DWG #	REVISION
A	OR8N4	14122	C
SCALE	NONE	MODEL # 340-441-2	SHEET 1/1